THK

Stocked item

LM Guide HSV

GLOBAL STANDARD MODEL

LM rails and LM Blocks are individually stocked.

THK CO., LTD.
TOKYO, JAPAN

CATALOG No.411E

LM Guide HSV

Structure and Features

- 4-way Equal Load
- Heavy load, high rigidity
- Practically a global standard size
- Superb capability of absorbing mounting error

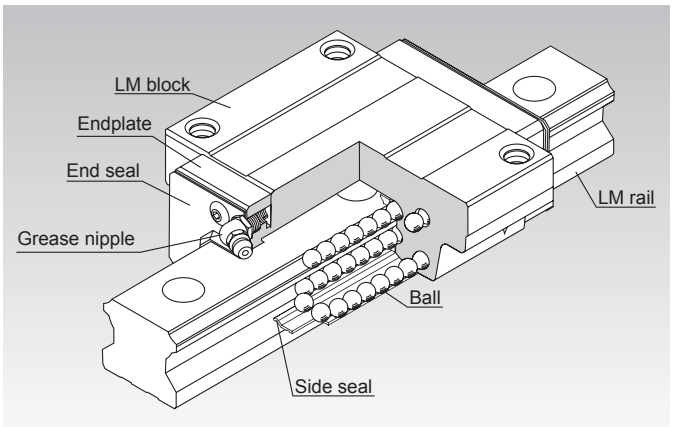

MODEL HSV - C	**MODEL** HSV - R
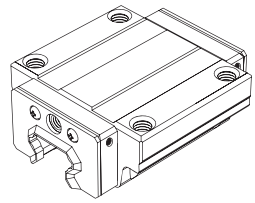	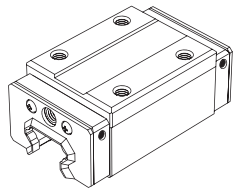
The flange of its LM block has tapped holes. Can be mounted from the top or the bottom.	Having a smaller LM block width (W) and tapped holes, this model is optimal for compact design.

Basic Load Rating

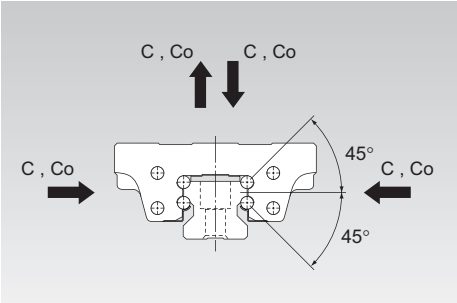

Model No.	Basic load rating		Static permissible moment kN-m ∗				
	C kN	C_0 kN	M_A		M_B		M_C
			1 block	Double blocks	1 block	Double blocks	1 block
HSV15	8.33	13.5	0.0805	0.457	0.0805	0.457	0.0844
HSV20	13.8	23.8	0.19	1.04	0.19	1.04	0.201
HSV25	19.9	34.4	0.307	1.71	0.307	1.71	0.344
HSV30	28	46.8	0.524	2.7	0.524	2.7	0.562
HSV35	37.3	61.1	0.782	3.93	0.782	3.93	0.905
HSV45	60	95.6	1.42	7.92	1.42	7.92	1.83

Note) Static permissible moment ∗
1 block: static permissible moment value with 1 LM block
Double blocks: static permissible moment value with 2 blocks closely contacting with each other

Radial Clearance and Accurasy Standards

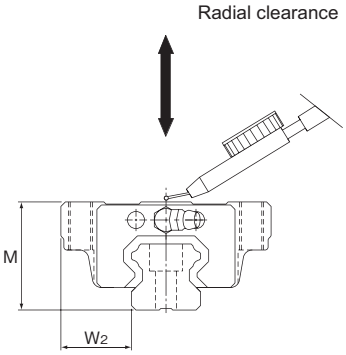

Radial clearance and Accuracy standards for model HSV

Unit:mm

Model No.	Radial clearance (μm)	Height M			Width W_2		Running parallelism of surface C(D) against surface A(B)	
		Dimensional tolerance	Difference	Difference (Many rail use)	Dimensional tolerance	Difference	3000L ~3090L	4520L ~4560L
HSV15	-4 to +2	±0.07	0.02	0.04	±0.06	0.02	0.021	——
HSV20	-5 to +2	±0.07	0.02	0.04	±0.06	0.02		0.024
HSV25	-6 to +3	±0.08	0.02	0.04	±0.07	0.025		
HSV30	-7 to +4	±0.08	0.02	0.04	±0.07	0.025		
HSV35	-8 to +4	±0.08	0.02	0.04	±0.07	0.025		
HSV45	-10 to +5	±0.08	0.025	0.05	±0.07	0.03		

Shoulder Height of the Mounting Base and the Corner Radius

Normally, the mounting base for the LM rail and the LM block has a reference-surface on the side face of the shoulder of the base in order to allow easy installation and highly accurate positioning.

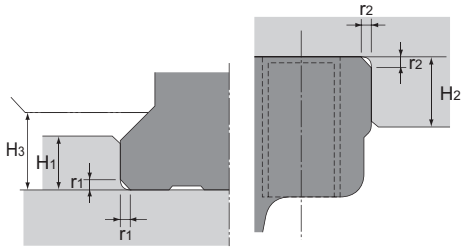

Shoulder for the LM Rail　　Shoulder for the LM Block

Unit:mm

Model No.	Corner radius for the LM rail r_1 (max)	Corner radius for the LM block r_2 (max)	Shoulder height for the LM rail H_1	Shoulder height for the LM block H_2	H_3
HSV15	0.5	0.5	3	4	4.2
HSV20	0.5	0.5	3.5	5	5
HSV25	1	1	5	5	6.5
HSV30	1	1	5	5	8
HSV35	1	1	6	6	9.4
HSV45	1	1	8	8	11.5

Global Standard Model

Model HSV-C

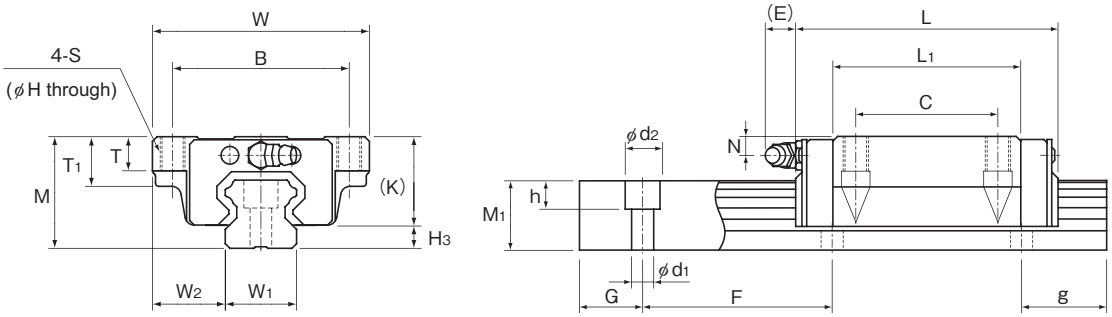

Unit:mm

Model No.	Outer dimensions			LM block dimensions												H_3	Mass kg
	Height M	Width W	Length L	W_2	B	C	S	H	L_1	T	T_1	K	N	E	Grease nipple		
HSV15C	24	47	56.6	16	38	30	M5	4.4	38.8	6.9	11	19.8	4.3	5.5	PB1021B	4.2	0.2
HSV20C	30	63	74	21.5	53	40	M6	5.4	50.8	10	10	25	5	12	B-M6F	5	0.35
HSV25C	36	70	83.1	23.5	57	45	M8	6.8	59.5	10	16	29.5	6	12	B-M6F	6.5	0.59
HSV30C	42	90	98	31	72	52	M10	8.5	70.4	10	18	34	7	12	B-M6F	8	1.1
HSV35C	48	100	109.4	33	82	62	M10	8.5	80.4	13	21	38.6	8	12	B-M6F	9.4	1.6
HSV45C	60	120	139	37.5	100	80	M12	10.5	98	15	25	48.5	10	16	B-R1/8	11.5	2.8

Model HSV-R

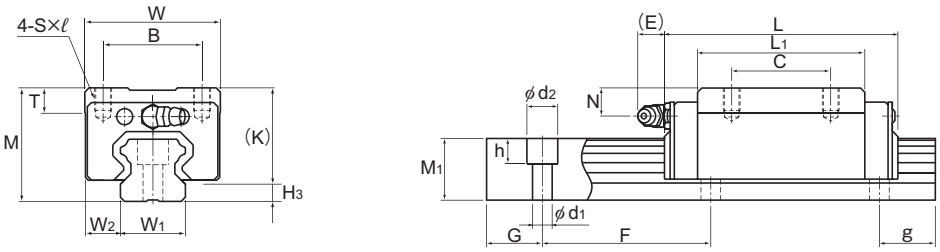

Unit:mm

Model No.	Outer dimensions			LM block dimensions												H_3	Mass kg
	Height M	Width W	Length L	W_2	B	C	S×ℓ	L_1	T	K	N	E	Grease nipple				
HSV15R	28	34	56.6	9.5	26	26	M4×5	38.8	6	23.8	8.3	5.5	PB1021B	4.2	0.18		
HSV20R	30	44	74	12	32	36	M5×6	50.8	8	25	5	12	B-M6F	5	0.25		
HSV25R	40	48	83.1	12.5	35	35	M6×8	59.5	9	33.5	10	12	B-M6F	6.5	0.54		
HSV30R	45	60	98	16	40	40	M8×10	70.4	9	37	10	12	B-M6F	8	0.9		
HSV35R	55	70	109.4	18	50	50	M8×12	80.4	12	45.6	15	12	B-M6F	9.4	1.5		
HSV45R	70	86	139	20.5	60	60	M10×17	98	15	58.5	20	16	B-R1/8	11.5	2.6		

LM RAIL Dimensions

Unit:mm

Model No.	Width W_1 $^{0}_{-0.05}$	Height M_1	Pitch F	$d_1 \times d_2 \times h$	LM rail length (G,g)		Mass kg/m
HSV15	15	15	60	4.5×7.5×5.3	3000(20,40)	——	1.5
HSV20	20	18	60	6×9.5×8.5	3000(20,40)	4540(20,20)	2.3
HSV25	23	22	60	7×11×9	3000(20,40)	4540(20,20)	3.3
HSV30	28	26	80	9×14×12	3000(20,20)	4520(20,20)	4.8
HSV35	34	29	80	9×14×12	3000(20,20)	4520(20,20)	6.6
HSV45	45	38	105	14×20×17	3000(20,40)	4560(22.5,22.5)	11

Model Number Coding

Block: HSV35 C 1SS BLOCK

- Block symbol
- Type of LM block (C or R)
- Model No. (HSV15,20,25,30,35,45)

Rail : HSV35 – 3000L RAIL

- Rail symbol
- LM rail length (in mm)
- Model No. (HSV15,20,25,30,35,45)

Please contact the LM rail length you need to your dealer.

THK LM Guide Model HSV

For the precautions on Using the LM Guide, see General Catalog or THK WEB SITE, respectively.

CAP C (Option)

The correspondence of the options, please contact your dealer.

If any of the LM rail mounting holes of an LM Guide is filled with cutting chips or foreign material, they may enter the LM block structure.
Entrance of such foreign material can be prevented by convering watch LM rail mounting hole with the dedicated cap.

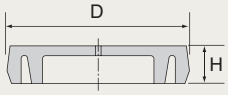

The Dedicated Cap C for LM Rail Mounting Holes

Model No.	Bolt used	Main dimensions (mm)		Supported model number
		D	H	
C4	M4	7.8	1.0	HSV15
C5	M5	9.8	2.4	HSV20
C6	M6	11.4	2.7	HSV25
C8	M8	14.4	3.7	HSV30
C8	M8	14.4	3.7	HSV35
C12	M12	20.5	4.7	HSV45

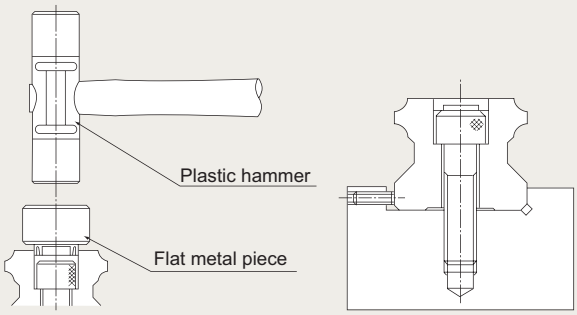

QZ Lubricator (Option)

QZ Lubricator feeds the right amount of lubricant to the raceway on the LM rail. This allows an oil film to continuously be formed between the rolling element and the raceway, and drastically extends the lubrication and maintenance intervals.

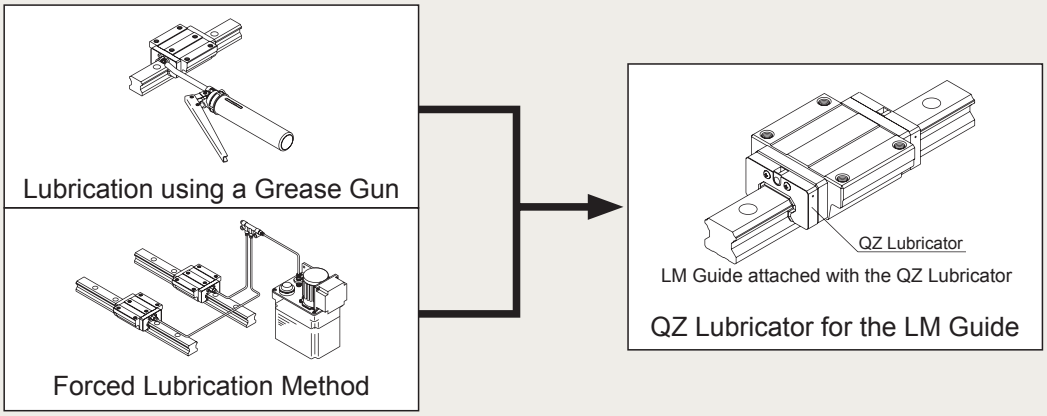

● **"LM GUIDE," and " " are registered trademarks of THK CO., LTD.**

●The photo may differ slightly in appearance from the actual product.
●The appearance and specifications of the product are subject to change without notice. Contact THK before placing an order.
●Although great care has been taken in the production of this catalog, THK will not take any responsibility for damage resulting from typographical errors or omissions.
●For the export of our products or technologies and for the sale for exports, THK in principle complies with the foreign exchange law and the Foreign Exchange and Foreign Trade Control Law as well as other relevant laws.
For export of THK products as single items, contact THK in advance.

All rights reserved

THK CO., LTD.

Head Office 3-11-6 Nishigotanda, Shinagawa-ku, Tokyo 141-8503 JAPAN
International Sales Department Phone:+81-3-5434-0351 Fax:+81-3-5434-0353
Global site : http://www.thk.com/

Dealer